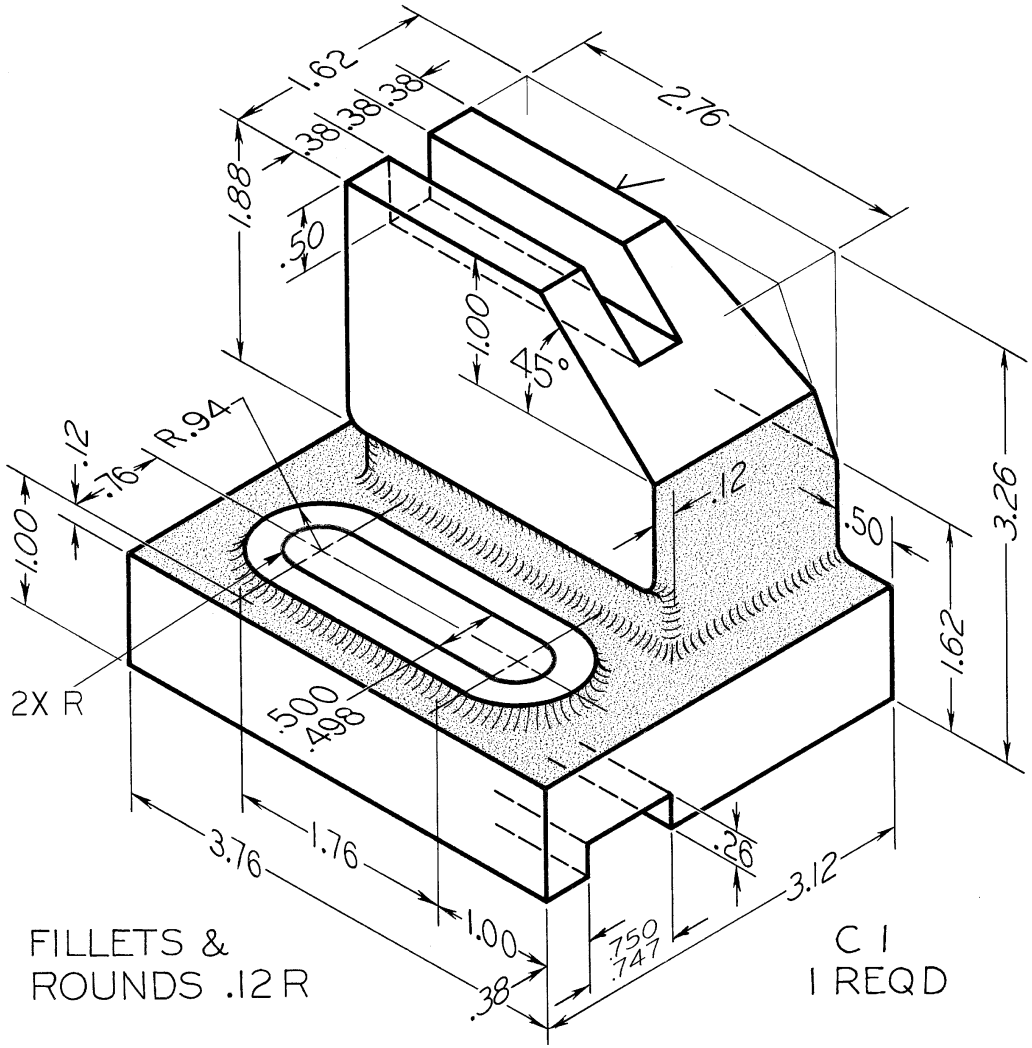

FIGURE 6.91 **Door Bearing.**