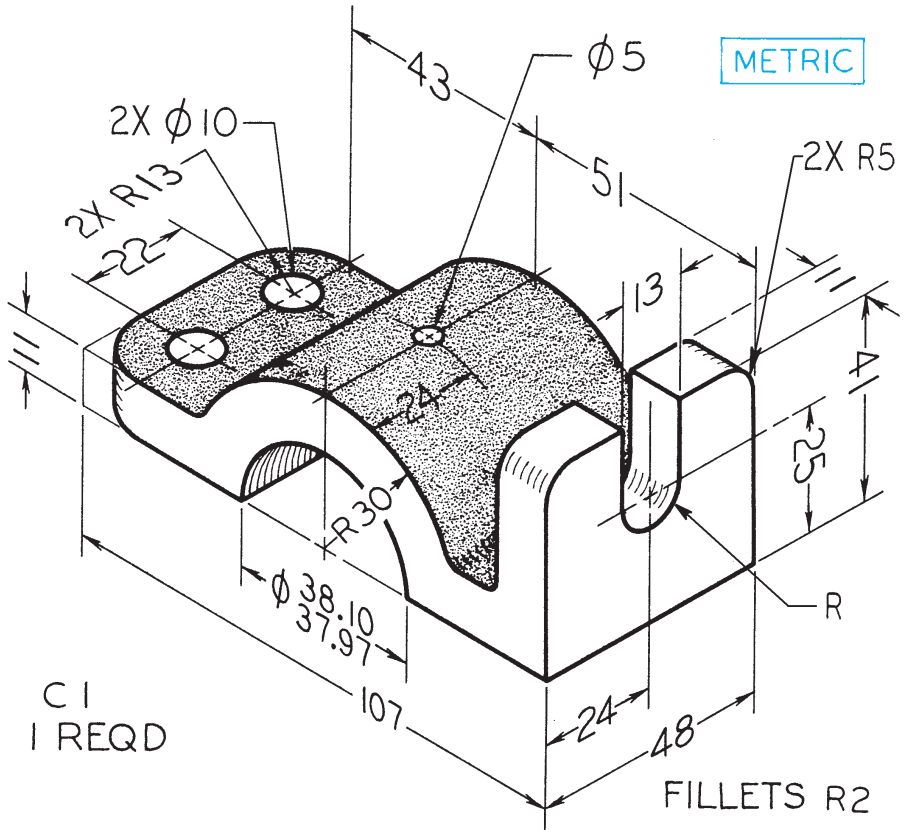

FIGURE 6.71 **Frame Guide.**