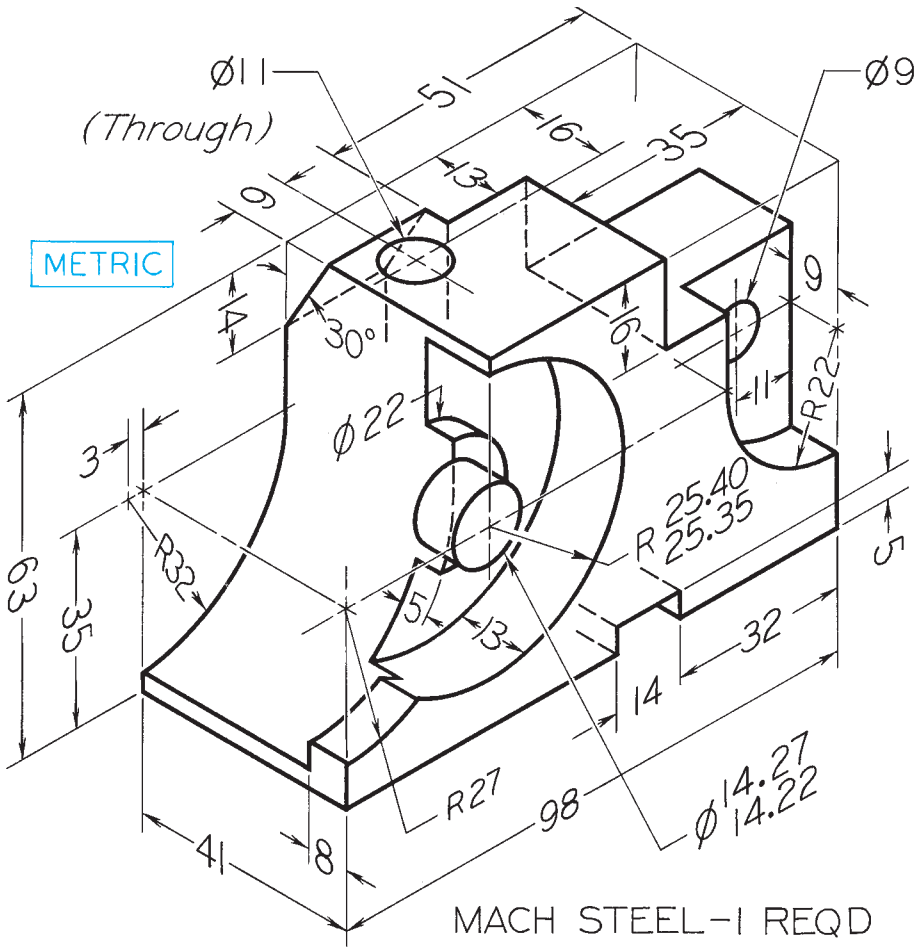

FIGURE 6.85 **Tool Holder.**